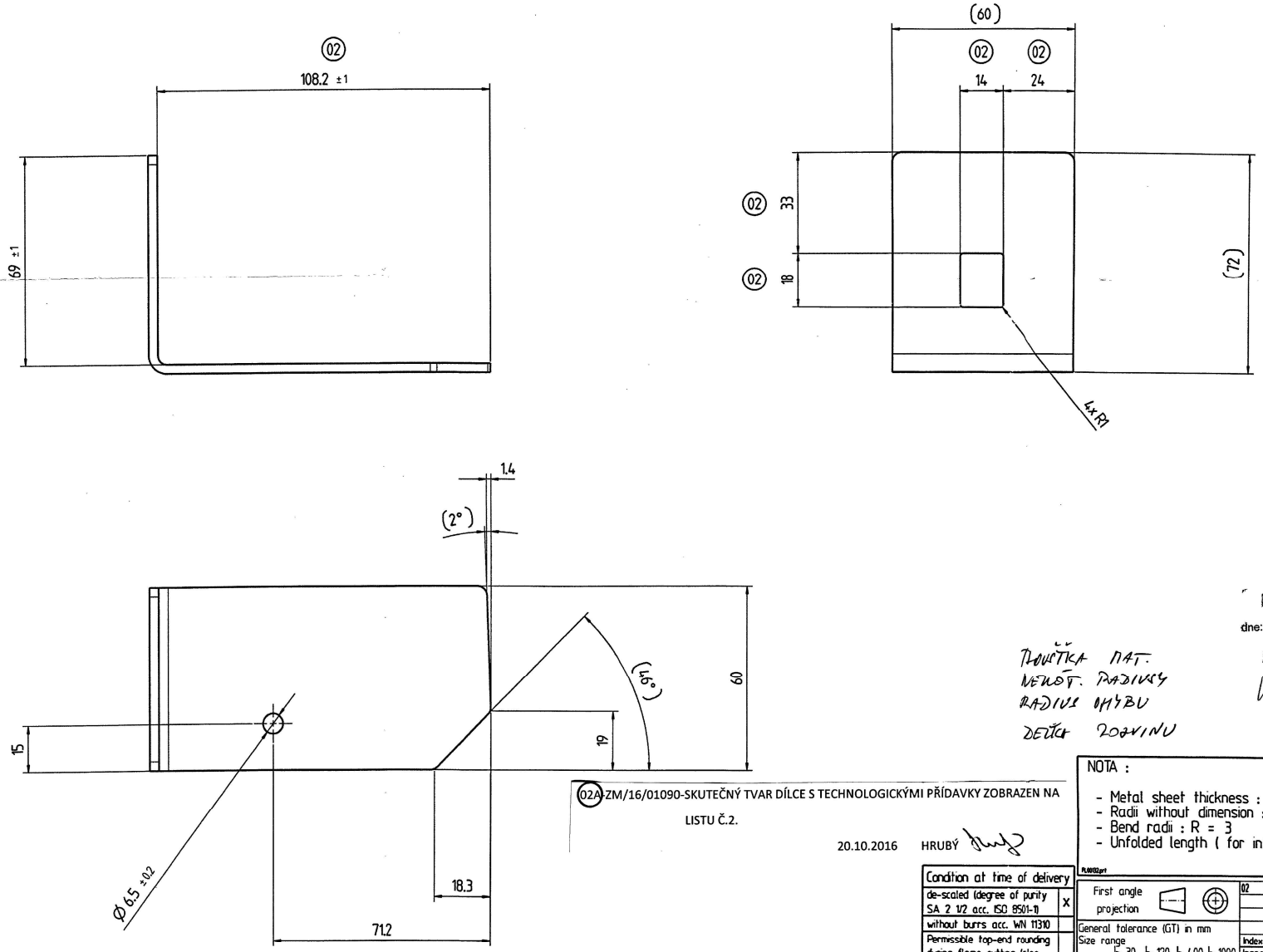

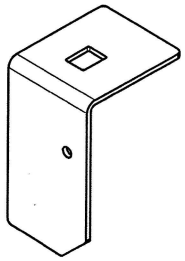

PŘEKLAD
dne: 17. 12. 2014
PROVEDL/A

TLOUŠŤKA MAT.
NEKÓT. RADIUSY
RADIUS OHYBU
DELÍCH ZOZVINU

14-11-2016
ARCHIV 3

02A-ZM/16/01090-SKUTEČNÝ TVAR DÍLCE S TECHNOLOGICKÝMI PŘÍDAVKY ZOBRAZEN NA LISTU Č.2.

20.10.2016 HRUBÝ

NOTA :

- Metal sheet thickness : 3 mm
- Radii without dimension : R = 3
- Bend radii : R = 3
- Unfolded length (for info) = / mm

NZ 14/01402

Condition at time of delivery	
de-scaled (degree of purity SA 2 1/2 acc. ISO 8501-1)	X
without burrs acc. WN 11310	
Permissible top-end rounding during flame cutting (also positive bead acc. WN 10572)	
oil-free / free of grease	
oiled	
oiling permissible	X
Indicate the required condition at time of delivery with an X.	

02

LASER cutting tolerances
NOTA : min cutting radius without dimensions R = 1 mm unless otherwise specified

≤ 30	30< ≤ 120	120< ≤ 400	400< ≤ 1000	1000 <
± 0,5	± 0,8	± 1,0	± 1,5	± 2,0

+0.5 / -0.5

First angle projection

General tolerance (GT) in mm
Size range: > 30 ≤ 30 | > 120 ≤ 120 | > 400 ≤ 400 | > 1000 ≤ 1000

GT coarse

L	1	2	2	3	4
◁	1	2	4	6	

Lengths (L) and angle (⊥ ∠) = ± GT

Tolerance Symbols ISO 1101
- ○ roundness = 1/2ø-Tol.
- straightness/flatness = GT
- concentricity/run out = GT
- symmetry = GT
- / / parallelism = GT
- ⊕ position = GT

Languages: en,fr

Index	alteration	Change no	Fit	Toler.
02	Oiled --> Oiled permissible, 108.2±0.5 --> ±1	T48720		
	Dim. 22 --> 24 / Dim. 18 --> 14			
	Dim. 35 --> 33 / Dim. 14 --> 18			

Inspection dim.
Auxillary dim. ( )

	Date	Name
Drawn	8.1.2014	J.Fonteny
Checked	8.1.2014	F.Proust
Auth'd	9.1.2014	R.Pelletier
M.check.	14.1.2014	J.LeCesne

Confidential document
Refer to protection notice ISO 16016

Material: S235JR following EN10025-2
Blank no:
Title: support battery hood
Weight: in kg 0.2
PROD.
Scale 1:1
Drawing number: / / 11914221801
Sheet: 1 of: 2
Repl.
Orig.
Released
11914221801d001
A2